REV.	DESCRIPTION	DRAW.	DATE.
A0	NEW RELEASE	Y.C.ZHANG	2022/8/11

HF

無鹵標識

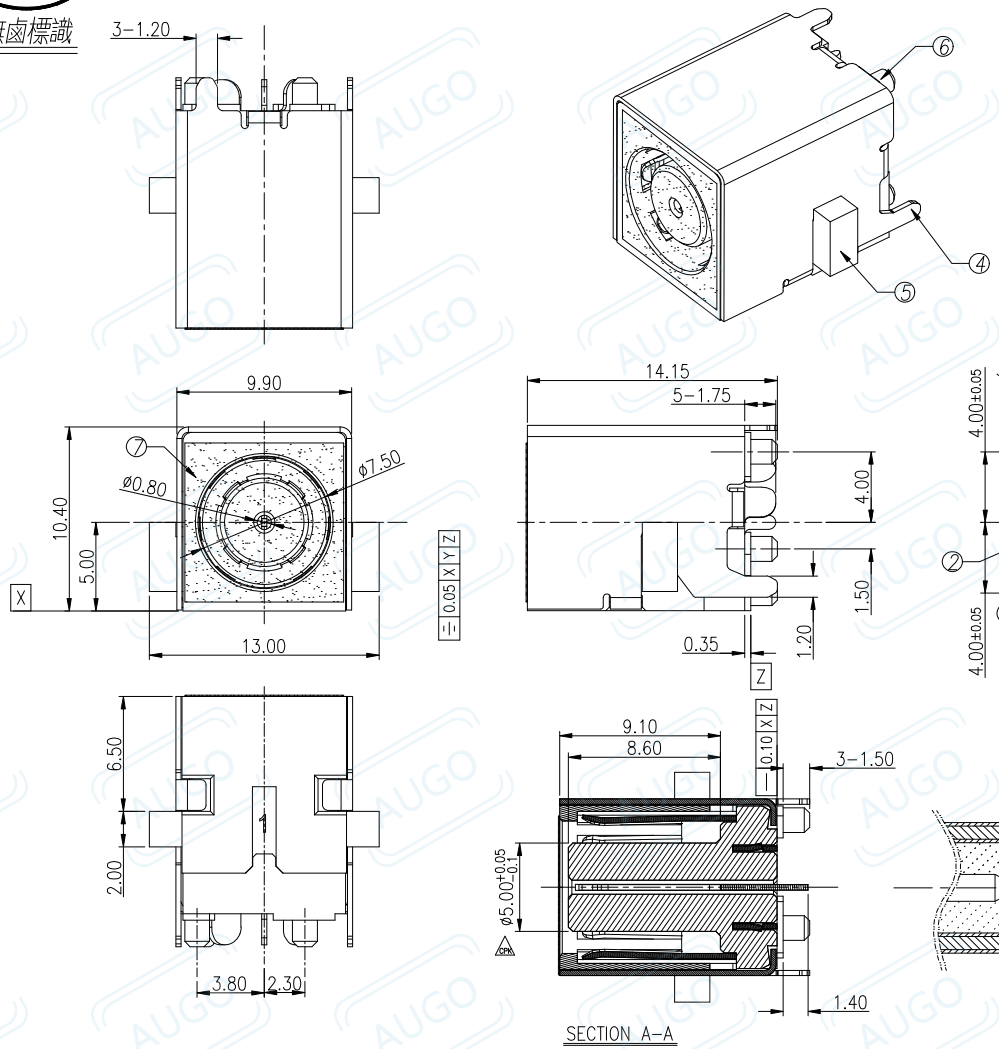

SCHEMATIC

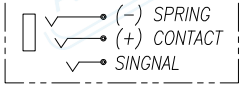

SPECIFICATIONS:

1. ELECTRICAL CHARACTERISTICS:
   - 1-1. RATING: 20V, 10A .
   - 1-2. CONTACT RESISTANCE:
     50 MILLIOHMS Max. FOR INITIAL,
     80 MILLIOHMS Max. AFTER 5000 CYCLES.
   - 1-3. INSULATION RESISTANCE: 100 MEGAOHMS Min. BY 500V DC AFTER 1 MINUTE.
   - 1-4. DIELECTRIC WITHSTANDING VOLTAGE: 500V RMS AFTER 1 MINUTE.
2. MECHANICAL CHARACTERISTICS:
   - 2-1. INSERTION FORCE : 0.3~3.0 KGF(2.94~29.4N)
   - 2-2. WITHDRAWAL FORCE : 0.3~3.0 KGF(2.94~29.4N)
3. LIFE TEST: 5,000 CYCLES MIN.

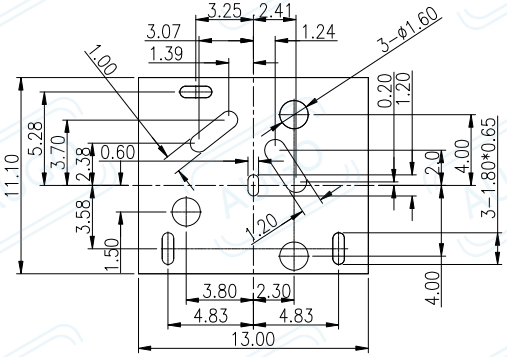

PCB LAYOUT TOP VIEW
TOLERANCES:±0.05

No.	PART NAME	QTY	MATERIAL(THICK)	PLATING(COLOR)
⑦	MYLAR	1	9.0*9.0*0.075	
⑥	COVER	1	PA10T	Black
⑤	HOUSING	1	PA10T	Black
④	SHELL	1	C2680R-EH T=0.30	Ni 50U"Min
③	TERMINAL 3#	1	C5210R-EH T=0.30	Au0.8U",Ni底50U"
②	TERMINAL 2#	1	C5210R-EH T=0.30	Au0.8U",Ni底50U"
①	TERMINAL 1#	1	C5210R-EH T=0.30	Au0.8U",Ni底50U"

AUGO

东莞市欧高电子有限公司
Dongguan Augo Electronics Co.,Ltd
地址:广东省东莞市黄江镇新市东江路6号富汇创园 电话:13827291296

COPYRIGHT RESERVED,PLEASE DO NOT COPY.

REV:	01	UNLESS OTHERWISE SPECIFIED,TOLERANCE:		TITLE:	DC POWER JACK
SIZE:	A4	X.	±0.50		
SCALE:1:1	UNIT: mm	X.x	±0.30	PART NO:	DC-070D-061-192
SHEET:1/1		X.xx	±0.20		
		ANGULAR	±2°		

DESIGN	G.C.CHEN	DATE	2022/8/11
DRAWING	Y.C.ZHANG	DATE	2022/8/11
CHECK	D.J.WANG	DATE	2022/8/11
SCALE	1:1	PAGE	1 OF 1