Rohs

REV.	DESCRIPTION	DRAW.	DATE.

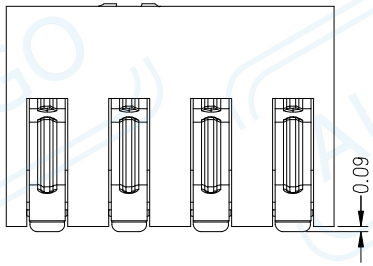

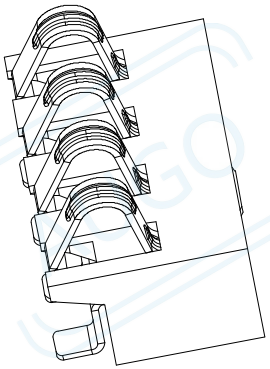

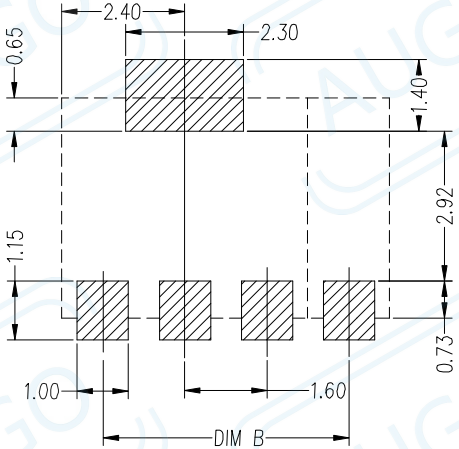

RECOMMENDED PCB LAYOUT

TOP VIEW(.XX±0.05)

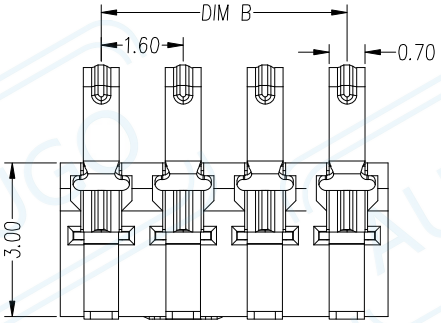

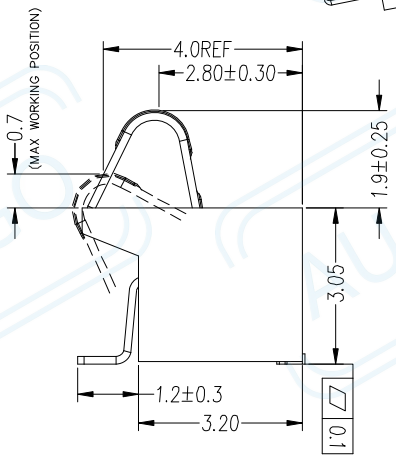

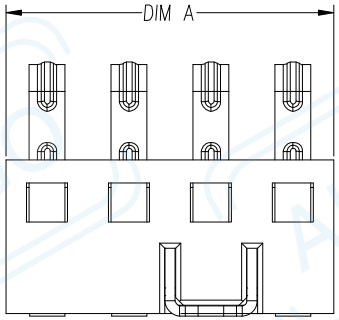

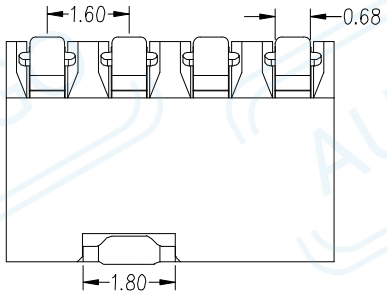

AUGO-BC-16-4P490	6.40	4.80
AUGO-BC-16-3P490	4.80	3.20
BE FILLED	DIM A	DIM B

Material :
Insulator : LCP(UL94V-0)
Contact : Phosphor Bronze
Contact Plated : Gold over Nickel or Tin
Specification :
Current Rating : 2.0A
Voltage Rating : 12V DC
Contact Resistance : 30mΩ
Insulation Resistance : 500MΩ
Dielectric Voltage : 500V
Operating Temperature : -40°~85°
Electrical Life : 3000cycles

AUGO	AUGO ELECTRONICS CO.,LTD.	REV:	01	UNLESS OTHERWISE SPECIFIED,TOLERANCE:		TITLE:	1.6 PITCH BATTERY CONNECTOR	DESIGN	G.C.CHEN	DATE	
		SIZE:	A4	X.	±0.20			DRAWING	Y.C.ZHANG	DATE	
		SCALE: 1:1	UNIT: mm	X.x	±0.15	PART NO:	AUGO-BC-16-4P490	CHECK	D.J.WANG	DATE	
		SHEET: 1/1		X.xx	±0.10			SCALE	1:1	PAGE	1 OF 1
				ANGULAR	±2°						

COPYRIGHT RESERVED,PLEASE DO NOT COPY.