CAD FILE:

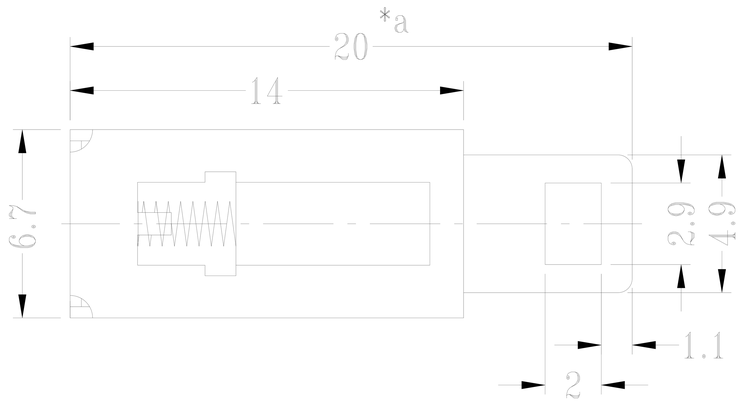

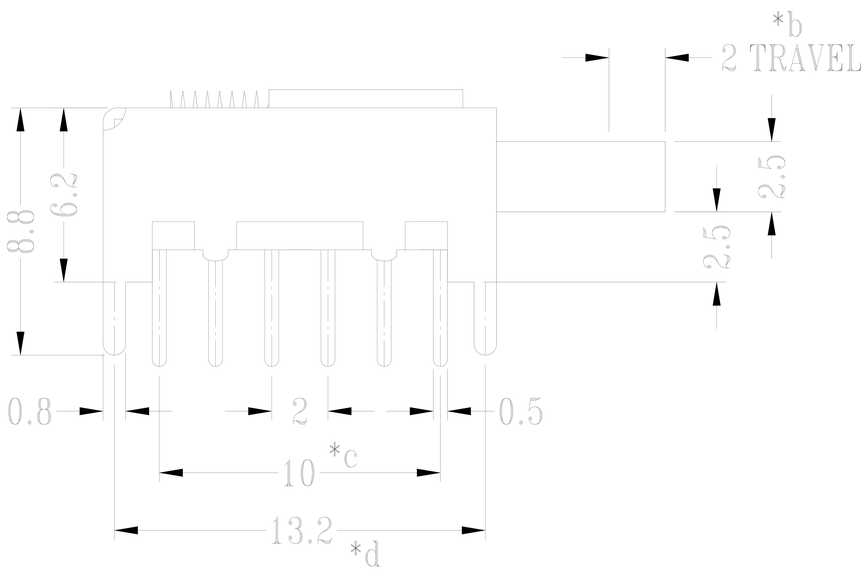

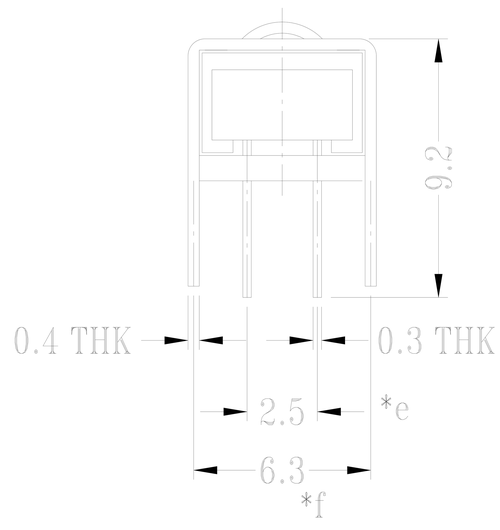

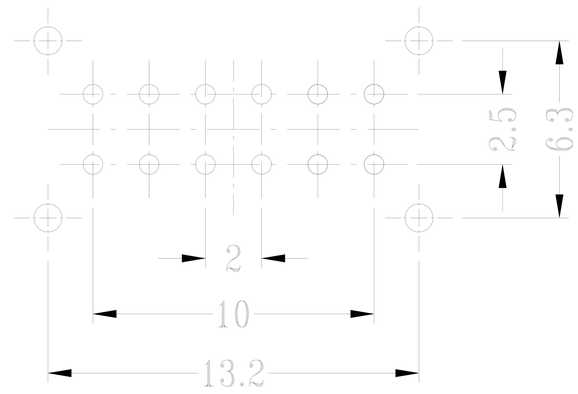

P.C.B LAYOUT
BOTTOM VIEW

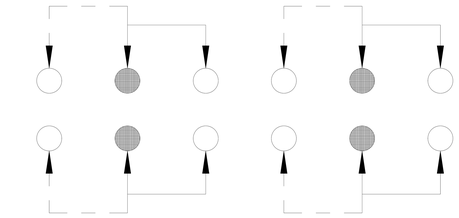

SCHEMATIC (NON-SHORTING)

注："*"表示关键尺寸（6）个

NO.	PARTS	MATERIALS	Q'TY	FINISH
8				
7				
6	CONTACT CLIP	PBS STRIP	4	Ag PLATED
5	TERMINAL	BRASS STRIP	12	Ag PLATED
4	BASE	PHENOLIC RESIN	1	NATURAL
3	FRAME	STEEL STRIP	1	Ni PLATED
2	SPRING	STEEL WIRE	1	NATURAL
1	KNOB	POM	1	BLACK

TOLERANCE
UNLESS SPECIFIED
WITHIN: 1.5±0.1mm
OVER : 1.5±0.2mm

ISSUE	DATE	DESCRIPTIONS	APPD.
A	2013-01-31	初 版	朱 国 辉

TITLE : PUSH SWITCH
MODEL: PS-42D02
UNIT : mm
SCALE: 3:1
DRWG NO.: AUGO-DR-PS42D02-00

DWN.	王 骏 松	2013-01-31
CHK'D	朱 国 辉	2013-01-31
APPD.		

东莞市欧高电子有限公司
DONGGUAN AUGO ELECTRONIC CO.,LTD.