CAD FILE:

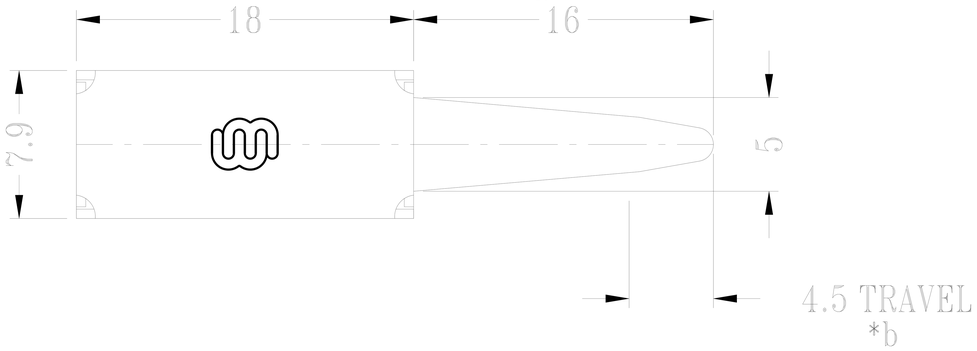

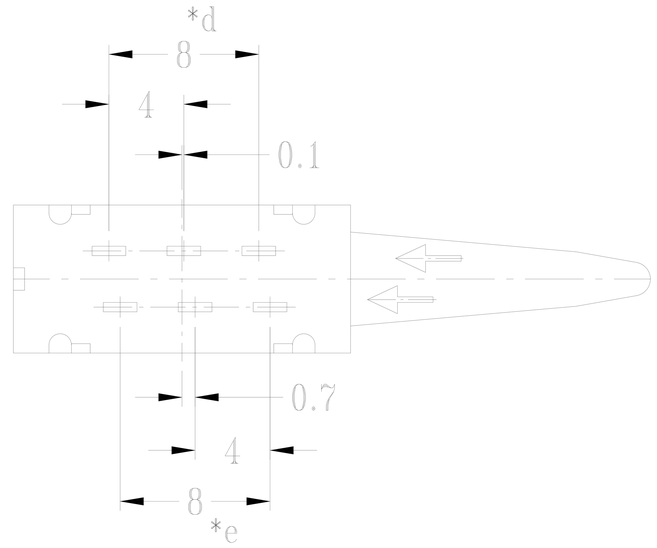

VIEW K

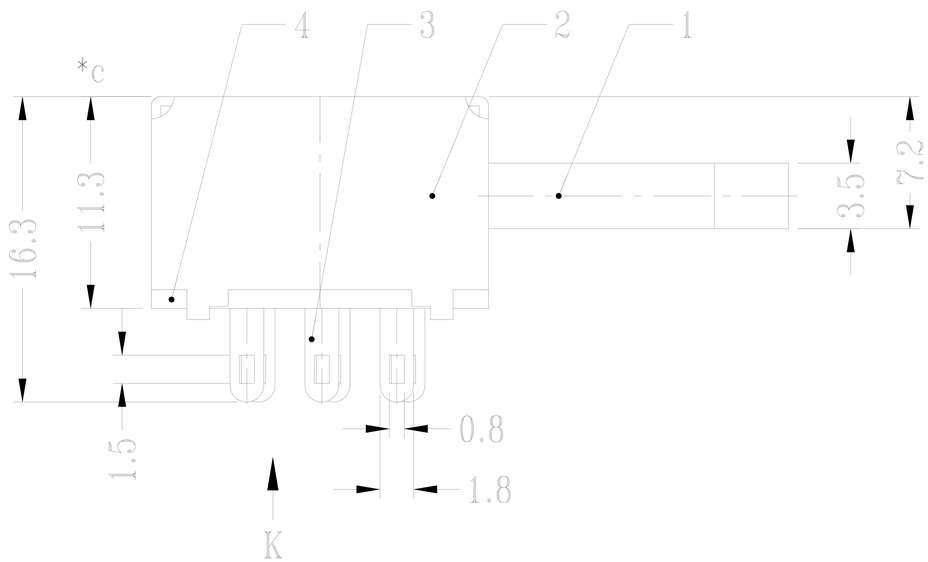

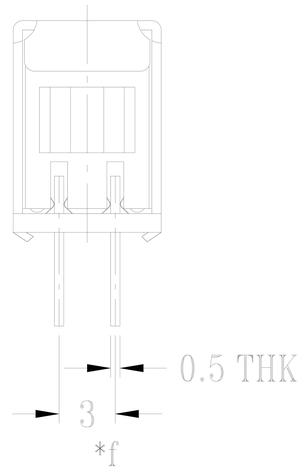

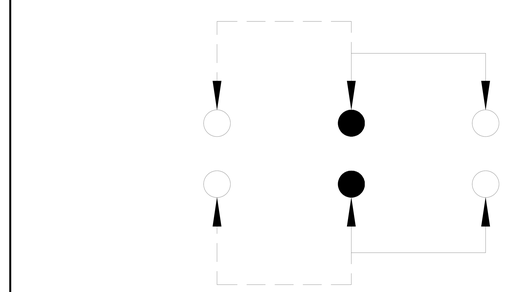

SCHEMATIC (NON-SHORTING)

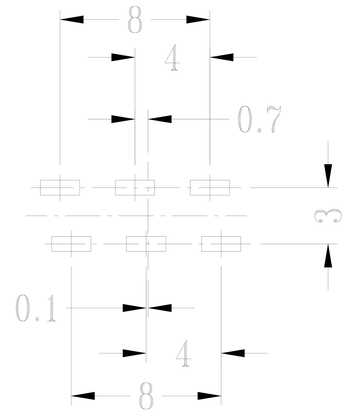

P.C.B LAYOUT
BOTTOM VIEW

注 : "*"□表示关键尺寸(6个).

NO.	PARTS	MATERIALS	Q'TY	FINISH
8				
7				
6	SPRING	STEEL WIRE	1	NATURAL
5	CONTACT CLIP	PBS C5210R-EH	2	Ag CLAD
4	BASE	PHENOLIC RESIN	1	NATURAL
3	TERMINAL	BRASS STRIP	6	Ag PLATED OVER Ni PLATED
2	FRAME	STEEL STRIP	1	Ni PLATED
1	KNOB	PC	1	BLACK

TOLERANCE UNLESS SPECIFIED
WITHIN 1.5mm : ±0.1mm
OVER 1.5mm : ±0.2mm

ISSUE	DATE	DESCRIPTIONS OF REVISION	APPD.
A	2012-11-06	初 版	朱 国 辉

TITLE : PUSH SWITCH
MODEL: PS-22I48
UNIT : mm
SCALE: 2:1
DRWG NO.: AUGO-DR-PS22I48-00

DWN.	王 骏 松	2012-11-06
CHK'D	朱 国 辉	2012-11-06
APPD.		

东莞市欧高电子有限公司
DONGGUAN AUGO ELECTRONIC CO.,LTD.