CAD FILE:

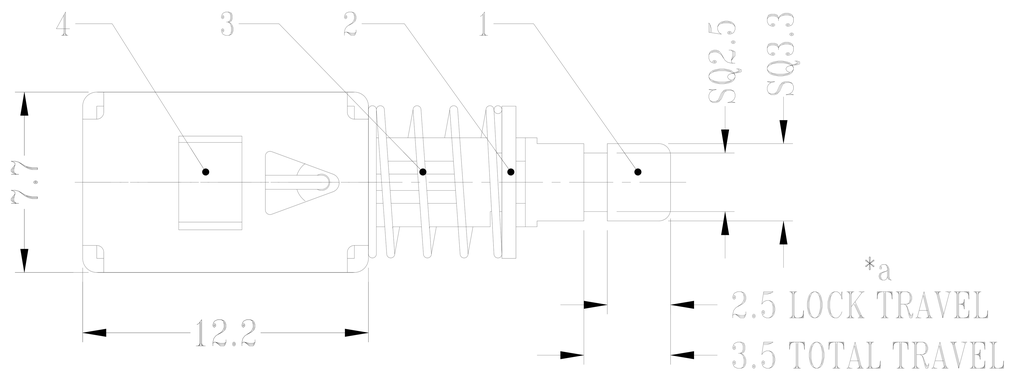

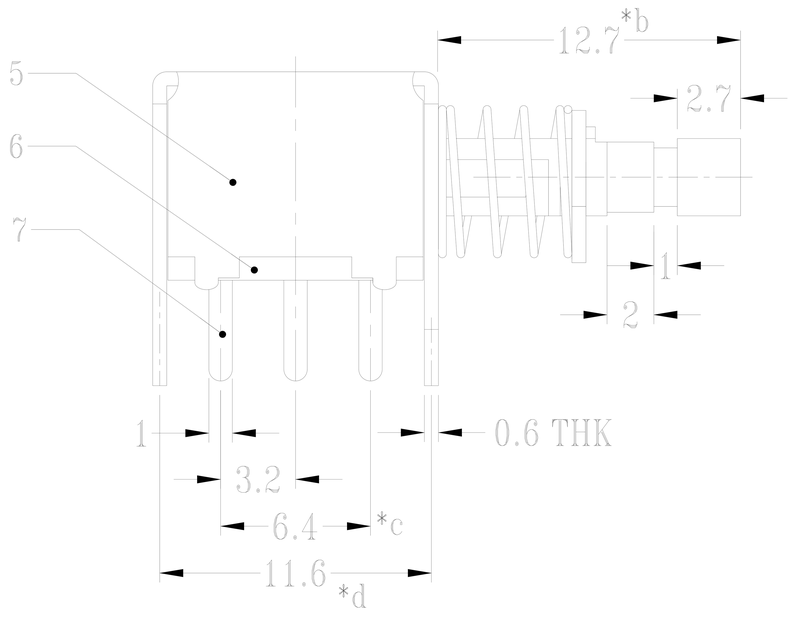

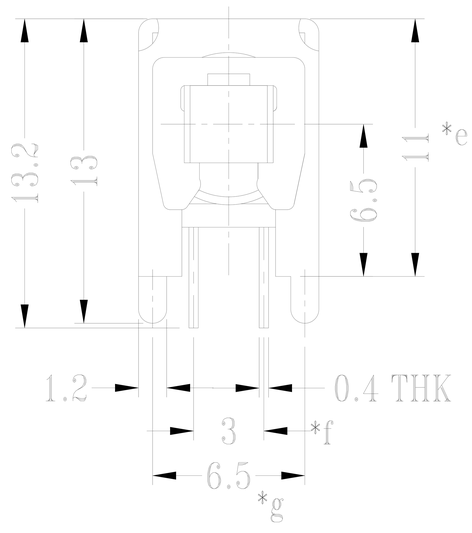

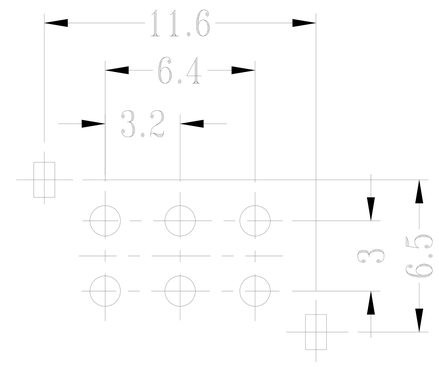

P.C.B LAYOUT
BOTTOM VIEW

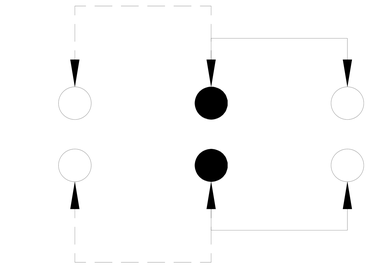

SCHEMATIC (NON-SHORTING)

注:"*"表示关键尺寸(7个)

NO.	PARTS	MATERIALS	Q'TY	FINISH
9	CONTACT CLIP	PBS STRIP	2	Ag PLATED
8	CAM STICK	PBS WIRE	1	NATURAL
7	TERMINAL	BRASS STRIP	6	Ag PLATED
6	BASE	PHENOLIC RESIN	1	NATURAL
5	FRAME	STEEL STRIP	1	Ni PLATED
4	SPRING PLATE	PBS STRIP	1	NATURAL
3	SPRING	STEEL WIRE	1	Ni PLATED
2	BLOCK	STEEL STRIP	1	Ni PLATED
1	KNOB	PA66	1	BLACK

TOLERANCE UNLESS SPECIFIED				
WITHIN 1.5mm : ±0.1mm	A	2012-09-11	初 版	朱 国 辉
OVER 1.5mm : ±0.2mm	ISSUE	DATE	DESCRIPTIONS OF REVISION	APPD.

TITLE : PUSH SWITCH	UNIT : mm	DRWG NO.: AUGO-DR-PS22F45-00		
MODEL: PS22F45	SCALE: 5:2	DWN.	王 骏 松	2012-09-11
东莞市欧高电子有限公司 DONGGUAN AUGO ELECTRONIC CO.,LTD.		CHK'D	朱 国 辉	2012-09-11
		APPD.		