CAD FILE:

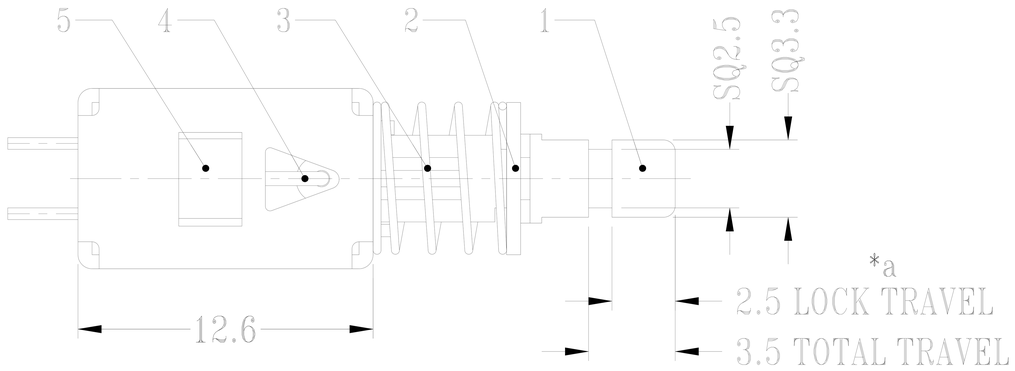

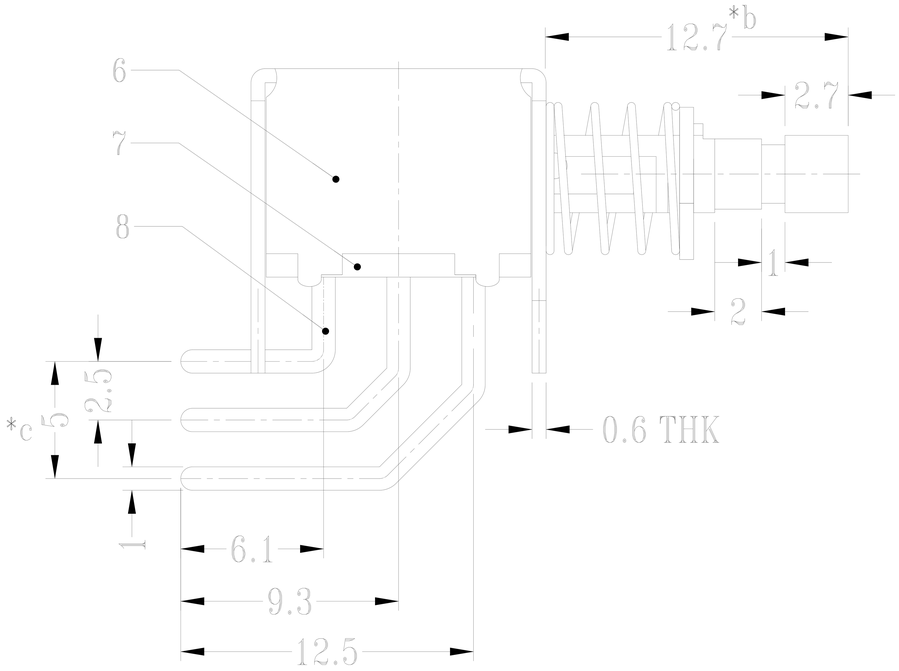

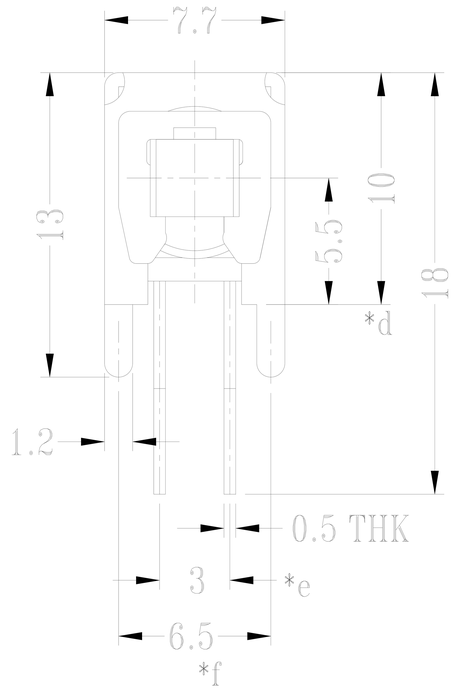

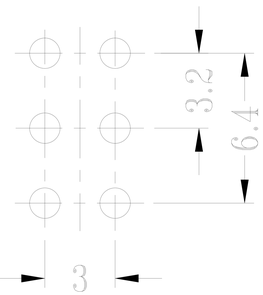

P.C.B LAYOUT
BOTTOM VIEW

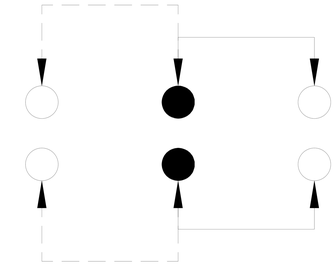

SCHEMATIC (NON-SHORTING)

注:"*"表示关键尺寸(6个)

NO.	PARTS	MATERIALS	Q'TY	FINISH
9	CONTACT CLIP	PBS STRIP	2	Ag PLATED
8	TERMINAL	BRASS STRIP	6	Ag PLATED
7	BASE	PHENOLIC RESIN	1	NATURAL
6	FRAME	STEEL STRIP	1	Ni PLATED
5	SPRING PLATE	PBS STRIP	1	NATURAL
4	CAM STICK	PBS STRIP	1	NATURAL
3	SPRING	STEEL WIRE	1	Ni PLATED
2	BLOCK	STEEL STRIP	1	Ni PLATED
1	KNOB	PA66	1	BLACK

TOLERANCE UNLESS SPECIFIED				
WITHIN 1.5mm : ±0.1mm	A	2012-11-03	初 版	朱 国 辉
OVER 1.5mm : ±0.2mm	ISSUE	DATE	DESCRIPTIONS OF REVISION	APPD.

TITLE : PUSH SWITCH	UNIT : mm	DRWG NO.: AUGO-DR-PS22F35-00		
MODEL: PS22F35	SCALE: 5:2	DWN.	王 骏 松	2012-11-03
东莞市欧高电子有限公司 DONGGUAN AUGO ELECTRONIC CO.,LTD.		CHK'D / APPD.	朱 国 辉	2012-11-03