CAD FILE:

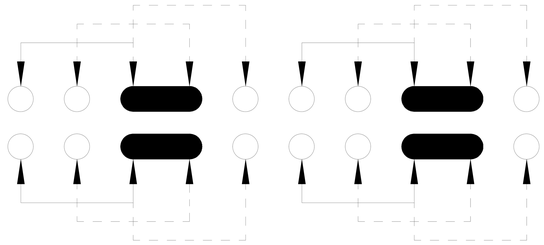

SCHEMATIC (SHORTING)

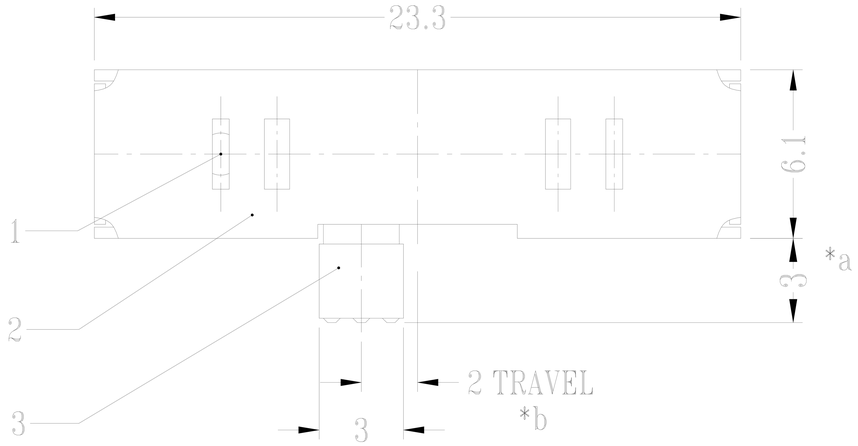


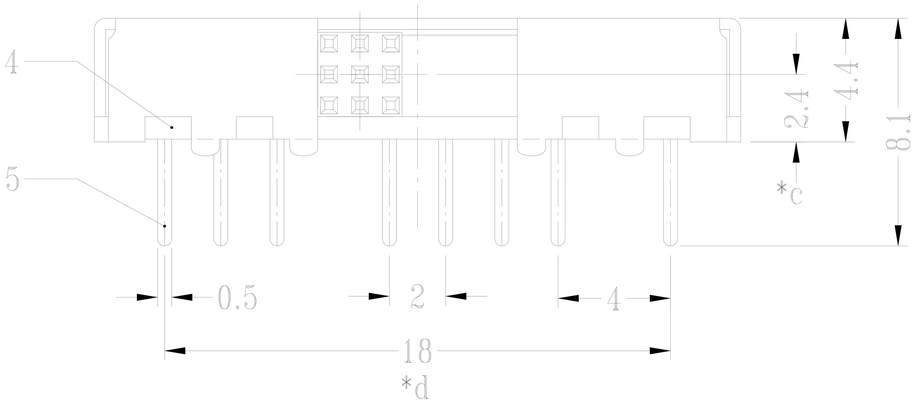


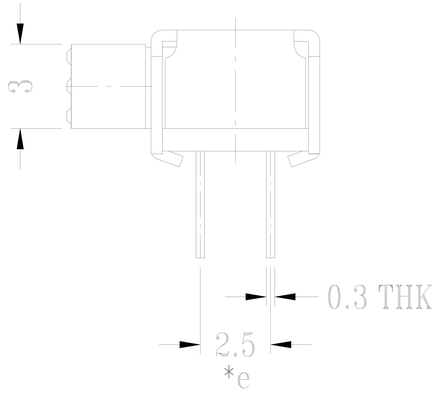


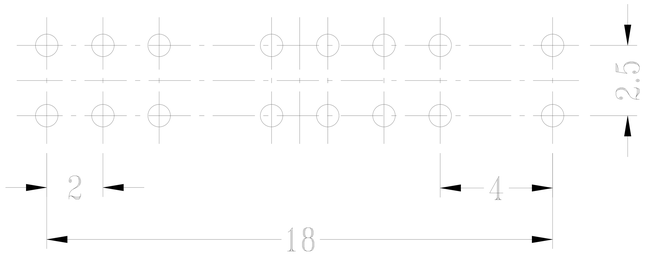


P.C.B LAYOUT
BOTTOM VIEW

注："*"表示关键尺寸（5个）

| NO. | PART NAME | MATERIAL | Q'TY | FINISHING |
|---|---|---|---|---|
| 8 | | | | |
| 7 | | | | |
| 6 | CONTACT CLIP | PBS STRIP | 4 | Ag PLATED |
| 5 | TERMINAL | BRASS STRIP | 16 | Ag PLATED |
| 4 | BASE | PHENOLIC RESIN | 1 | NATURAL |
| 3 | KNOB | POM | 1 | BLACK |
| 2 | FRAME | STEEL STRIP | 1 | Ni PLATED |
| 1 | SPRING PLATE | PBS STRIP | 1 | NATURAL |

TOLERANCE UNLESS SPECIFIED
WITHIN 1.5mm : ±0.1mm
OVER 1.5mm : ±0.2mm

| ISSUE | DATE | DESCRIPTIONS OF REVISION | APPD. |
|---|---|---|---|
| A | 2012-9-1 | 初 版 | |

TITLE : HORIZONTAL SLIDE SWITCH
UNIT : mm
DRWG NO.: AUGO-DR-SK43D08PG3-00
MODEL: SK-43D08-PG3
SCALE: 3:1
DWN. 王 骏 松 2012-9-1
CHK'D
APPD.

东莞市欧高电子有限公司
DONGGUAN AUGO ELECTRONIC CO.,LTD.