CAD FILE:

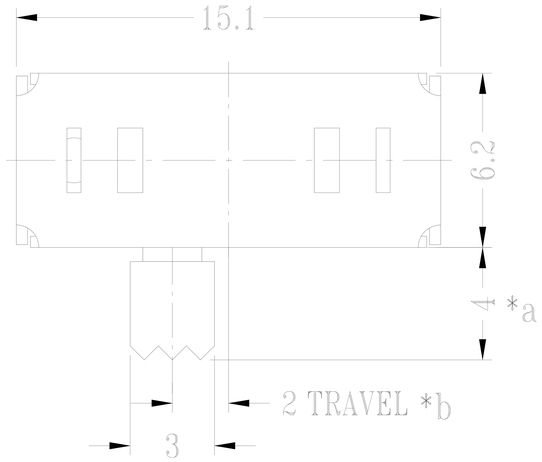

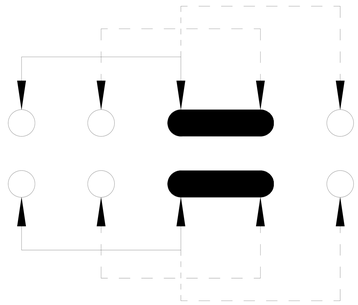

SCHEMATIC (SHORTING)

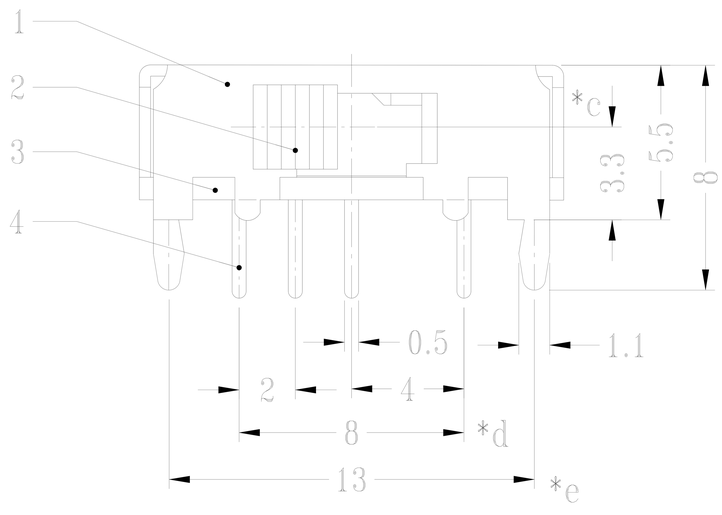

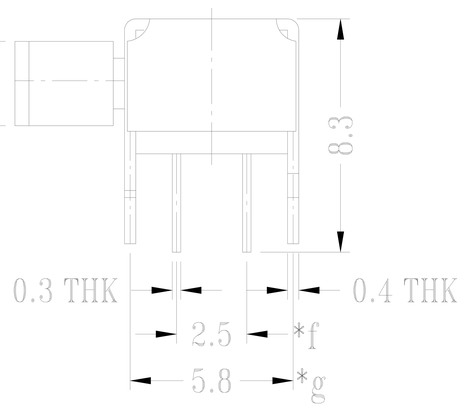

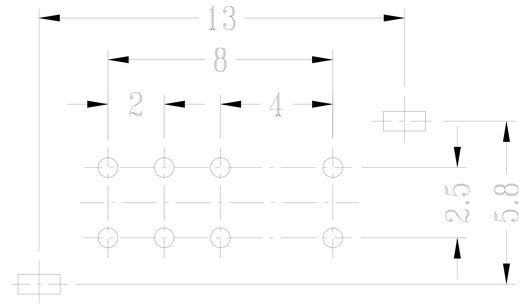

P.C.B LAYOUT
BOTTOM VIEW

注：″*″□表示关键尺寸(7个).

NO.	PARTS	MATERIALS	Q'TY	FINISH
8				
7				
6	SPRING PLATE	SUS	1	NATURAL
5	CONTACT CLIP	PBS STRIP	2	Ag PLATED
4	TERMINAL	BRASS STRIP	8	Ag PLATED
3	BASE	PHENOLIC RESIN	1	NATURAL
2	KNOB	POM	1	BLACK
1	FRAME	STEEL STRIP	1	Ni PLATED

TOLERANCE UNLESS SPECIFIED
WITHIN 1.5mm : ±0.1mm
OVER 1.5mm : ±0.2mm

ISSUE	DATE	DESCRIPTIONS OF REVISION	APPD.
A	2012-8-14	初 版	朱 国 辉

TITLE : HORIZONTAL SLIDE SWITCH
UNIT : mm
DRWG NO.: AUGO-DR-SK23D06G4-00
MODEL: SK23D06G4
SCALE: 3:1

DWN.	王 骏 松	2012-8-14
CHK'D	朱 国 辉	2012-8-14
APPD.		

东莞市欧高电子有限公司
DONGGUAN AUGO ELECTRONIC CO.,LTD.